BX1914 Installation Instructions
1985-92 Dodge/Plymouth Colt
1985-92 Mitsubishi Mirage

Installation of this baseplate requires removing the body support struts located on the front underside of each side of the vehicle.

1. Read the General Instruction Sheet included with this baseplate.
2. The baseplate mounts to the front underside of the car using seven existing bolts: three on each side and one in the center of the car.
3. Remove the body support struts located on the front underside of each side of the car. These struts are attached on one end with a bolt to the body and on the other with a nut to the “tie down” brackets. The “tie down” brackets are stamped metal brackets with an oblong hole facing downward.
4. Remove the “tie down” bolts and inspect them for reuse.
5. Remove the front bolt from the drivers side only of the engine support brace.
6. Position the baseplate on the car and hand start the tie down bolts previously removed. Use locktite on all bolts, but do not tighten yet.
7. The dimensional variations between other wise identical cars can be considerable. While the location and the size of the holes in the baseplate were designed to facilitate easy installation, it may be necessary to file a hole slightly to allow a bolt to clear.
8. Loosely attach the center bracket to the baseplate with the 1/2" bolts and lockwashers supplied. ’85-’88 Models use the 8-5/8" long center bracket. ’88-’92 Models use the 7-7/16" long center bracket.
9. Hand start the previously removed engine brace bolt.
10. When all bolts align, tighten securely.
11. Reinstall the body support struts. Note that the end which previously attached to the “tie down” bracket now attaches to the baseplate.
12. Install the tow bar and safety cables according to the instructions included in their packages.
13. Do not substitute other devices if the pin and clip are lost.
14. DEALER OR INSTALLER: BE CERTAIN THE USER RECEIVES THE INSTRUCTION SHEET.

Tools Required

3/4" socket	10mm socket	14mm socket
17mm socket		

Parts List

Ref. No.	Qty.	Part No.	Description
1	1	61-3667	Baseplate, BX1914
2	1	61-3441	Center Bracket 8-5/8, Long
3	1	61-3440	Center Bracket 7-7/16, Short
4	2	201-0051	1/2-13 x 1-1/2 bolt, Grade 5
5	2	203-0012	1/2 Lock Washer

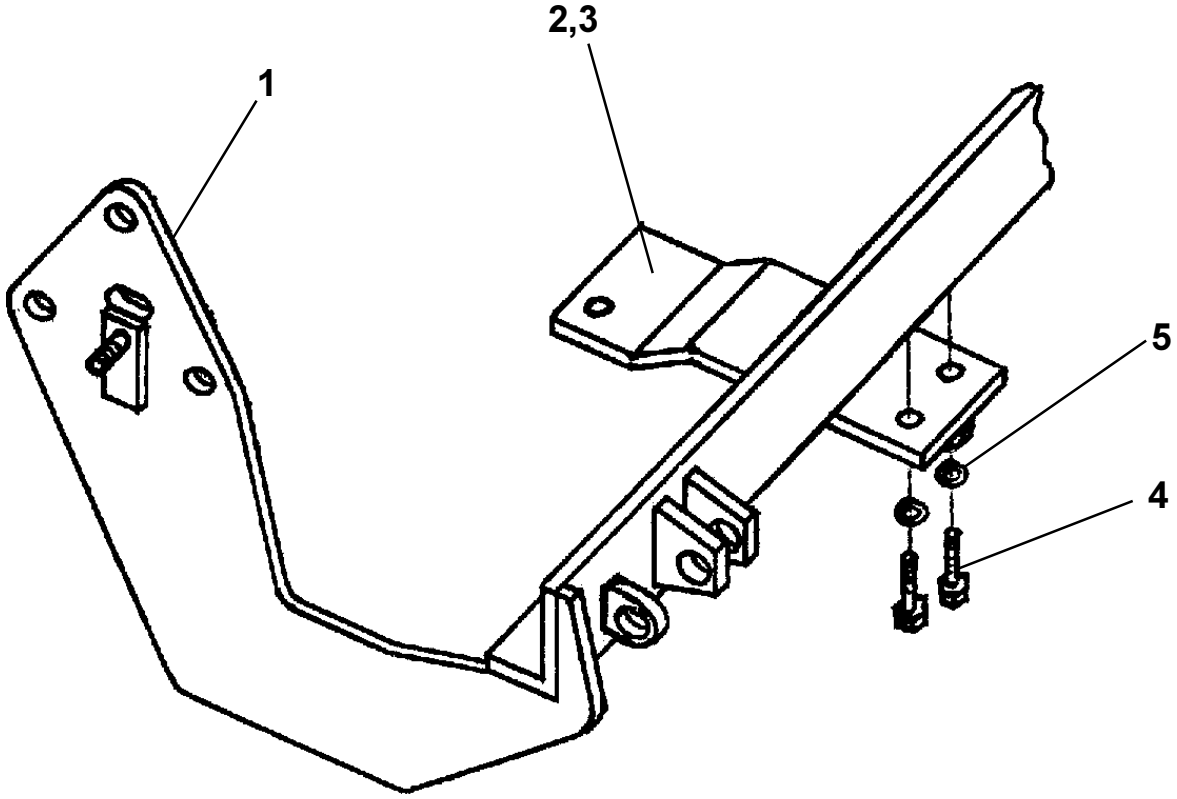

© 1994 Automatic Equipment
Mfg. Co. Pender, NE 68047