INSTALLATION INSTRUCTIONS
Part Number 33-2086

This filter fits: **See current K&N catalog for complete listing**

FREE K&N DECAL To register your warranty, please see us online at knfilters.com/register. FREE K&N DECAL

Congratulations, you have purchased the finest air filter that money can buy. With proper care, this filter will last 1 million miles or more. This filter is a direct replacement for the stock air filter, and no modifications will be required. However the following procedure MUST be followed to ensure a proper fit and seal of the K&N Air Filter.

Installation

1) Loosen the hose clamp on the intake hose at the airbox and remove the hose from the airbox.
2) Remove the stock air filter.
3) Wipe any dirt out of the lid or base. The airbox base must be clean and dry so that the gaskets will stick to it.
4) Apply the self-sticking gaskets around the edge of the filter opening.
5) Install the K&N Air Filter.
6) Re-install the hose onto the airbox and tighten clamp.

THESE INSTRUCTIONS MUST BE FOLLOWED EVERY TIME THE FILTER IS SERVICED, OTHERWISE THE FILTER MAY NOT SEAL, AND DAMAGE TO THE ENGINE COULD RESULT.

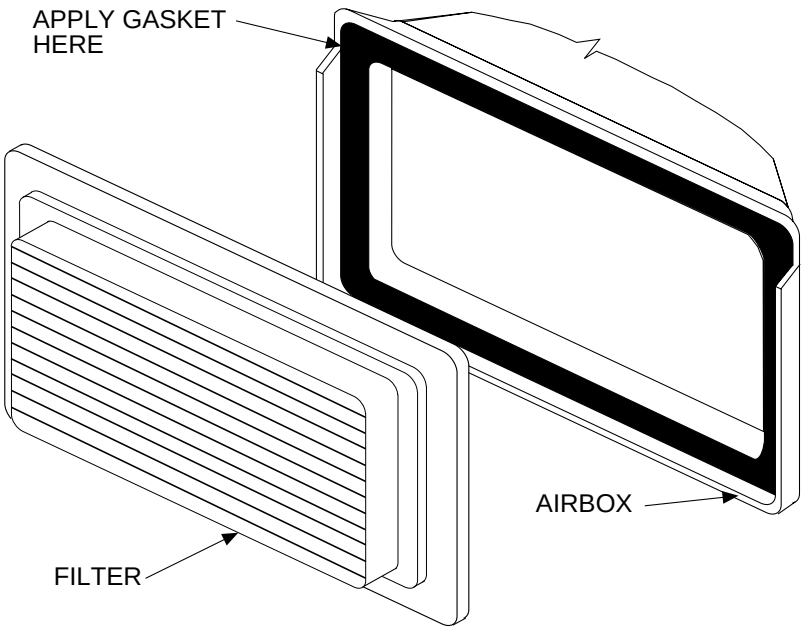

• 1455 CITRUS St., P.O. BOX 1329, RIVERSIDE, CA., U.S.A. 92502 • TECH SERVICE 800-858-3333 • FAX 951-826-4001
• e-mail: tech@knfilters.com • WWW: http://www.knfilters.com

17758a
04/12/08